Shanley Pump and Equipment, Inc. 2525 South Clearbrook Drive Arlington Heights, Il. 60005-4623 P:847,439.9200 . F:847.439.9388

DIMENSIONS "TECNIUM" PUMP TYPE: BVS

TECNIUM

FLANGES	SPEED	Type	SERIE
ANSI B16.5 150 Lbs.	n= ..... r/m. t/m. r/m.	15.40	2000

Dimensions in inches

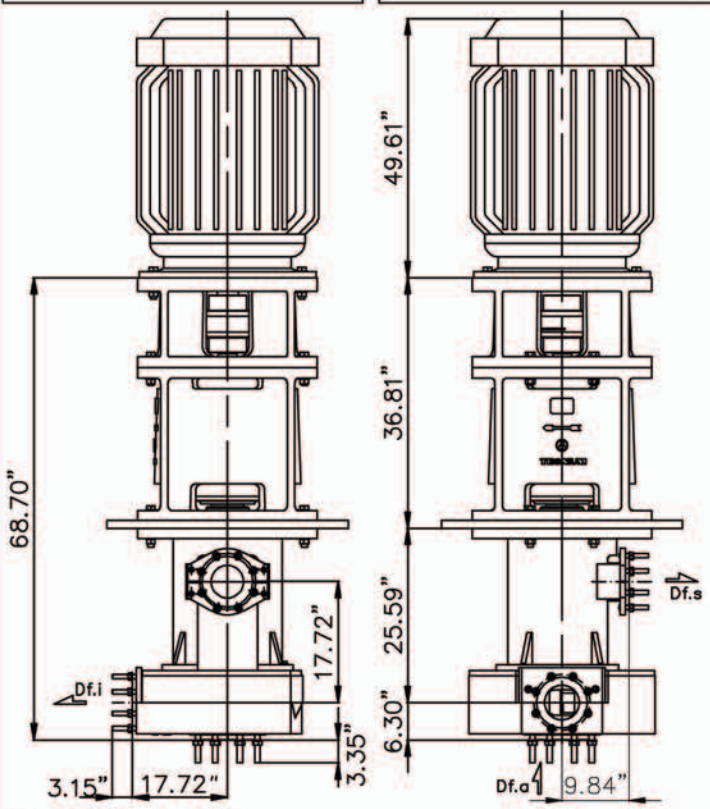

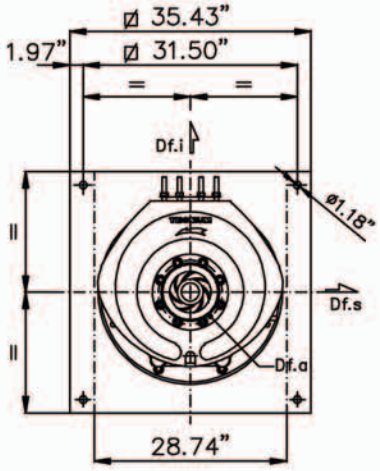

Weight 5742 lbs.

Loads in nozzles				
Df.i	6"	Traction = 877 Lb.	Moment = 18487	Lb.in.
Df.a	8"	Traction = 1169 Lb.	Moment = 24649	Lb.in.
Df.s	6"	Traction = 877 Lb.	Moment = 18487	Lb.in.

Discharge Df.i 6"	Suction Df.a 8"	Security Df.s 6"

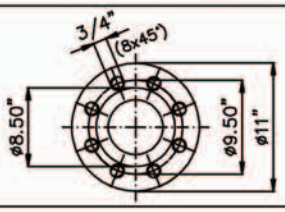

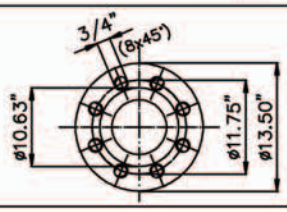

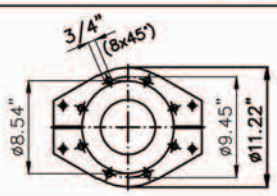

Motor					NEMA – IP 55
Type	HP/CV	KW	r.p.m. t.p.m.	Volt.	Weight
315L	220	160	1450	380/660	810

ITEM.
ORDER
CUSTOMER

IA. 1.1.0.11	TECNIUM®	Tech. Sheet
Ed. 07.07		49308